COLORIX

WORLD OF SUBLIMATION IS CHANGING ARE YOU ?

RANGE OF SUBLIMATION

HIGH-SPEED DYE-SUBLIMATION PRINTER

COLORIX

Colorix digital printing solution LLP is one the innovative supplier of digital inkjet printers with team of experts working into digital since 2008.

With presence across the India, and a strong 100 members team with 27 technical staff as well as a strong leadership through technical innovation, service infrastructure with complete customer focus.

We have range of models for different Requirement of customer and cover all ink segments like Reactive, Acid, Dispense, Pigment & Sublimation . We stay perceptive to future needs by being observant of changes in the world. We transform ourselves by thinking outside the box & Always working towards bringing industrial level solutions at best possible cost.

- 27 engineers & application team
- One of the oldest & expert player in digital industry since 2008
- We deliver best price to performance ratio
- 24x7 customer Center for service & support
- Superior product quality

Quality is never an accident
It is always the result of INTELLIGENT effort

SPORTS WEAR

GARMENTS

FASHION WEAR

HOME FURNISHING

SUB PRO I+

www.colorix.in

TECHNICAL SPECIFICATION

- **Print Head**
  High Speed and High Resolution Industrial Print head
- **Print Head No.**
  Upto 4 Pieces
- **Printing Mode**
  600*600 dpi 600*900 dpi 600*1200 dpi
- **Printing Speed**
  up to 300 sqm/hr
- **Max. Printing Width**
  upto 1800 mm
- **Dimension(L*W*H)**
  4280mm * 1980mm *1600mm (printer)
  4140mm * 1700mm * 1920mm(package)
- **Weight**
  Printer:1200 Kg Dryer:100Kg
- **Ink Colors**
  C, M, Y, K, Orange, Blue, Fluorescence Pink, Fluorescence Yellow
- **Ink Type**
  Sublimation Ink
- **Max. Roll Diameter**
  400mm(<=80g, 1000m)
- **Dryer Type**
  2 IR + Hot air
- **Power Supply**
  AC 380V
- **Power Consumption**
  System : 3 KW Dryer : 11 KW
- **Compresses air**
  0.6 MPA
- **Production Parameters**
  22-26 degree Celsius, relative humanity 45% - 60% (non-condensing)

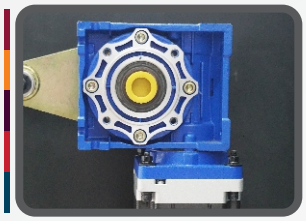

Individual motor system

Individual Motor System For Guide Rolls And Pressure Rolls

Two IR and One hot air dryer (best in class)

Two IT + One hot air dryer for high speed patch prints

Auto purging system (first in class)

High speed and Resolution industrial print head along with dryer to get the best penetration

Bulk Ink supply system

Bulk ink supply system for hassle free printing

Integrated work station panel

Integrated work station panel for seamless operations

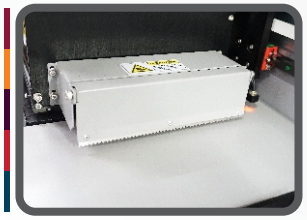

Protection Box

This unit immediately stop the machine when it collide with any foreign objects that can physically damage the print heads

Big roll feeding system

400mm(<=80g, 1000m)

INSTALLATION LAYOUT

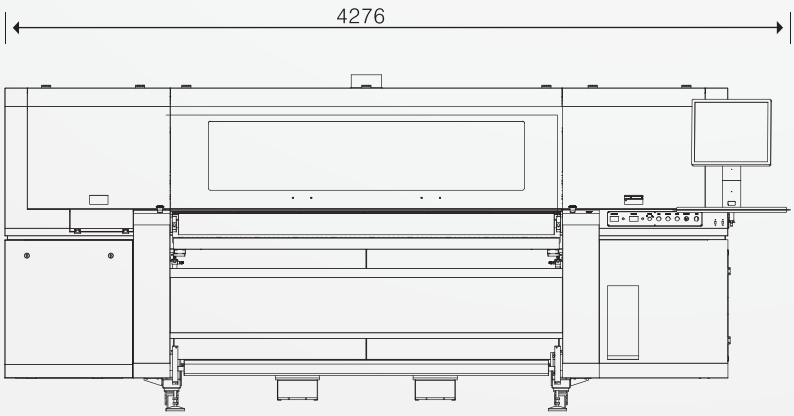

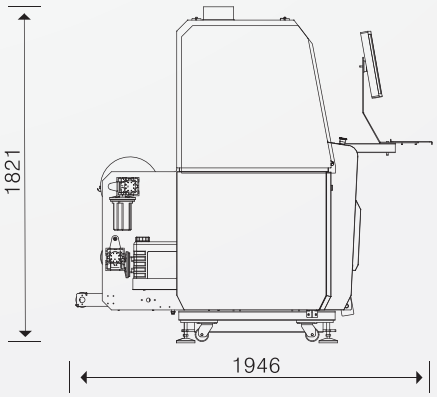

SUB PRO II+

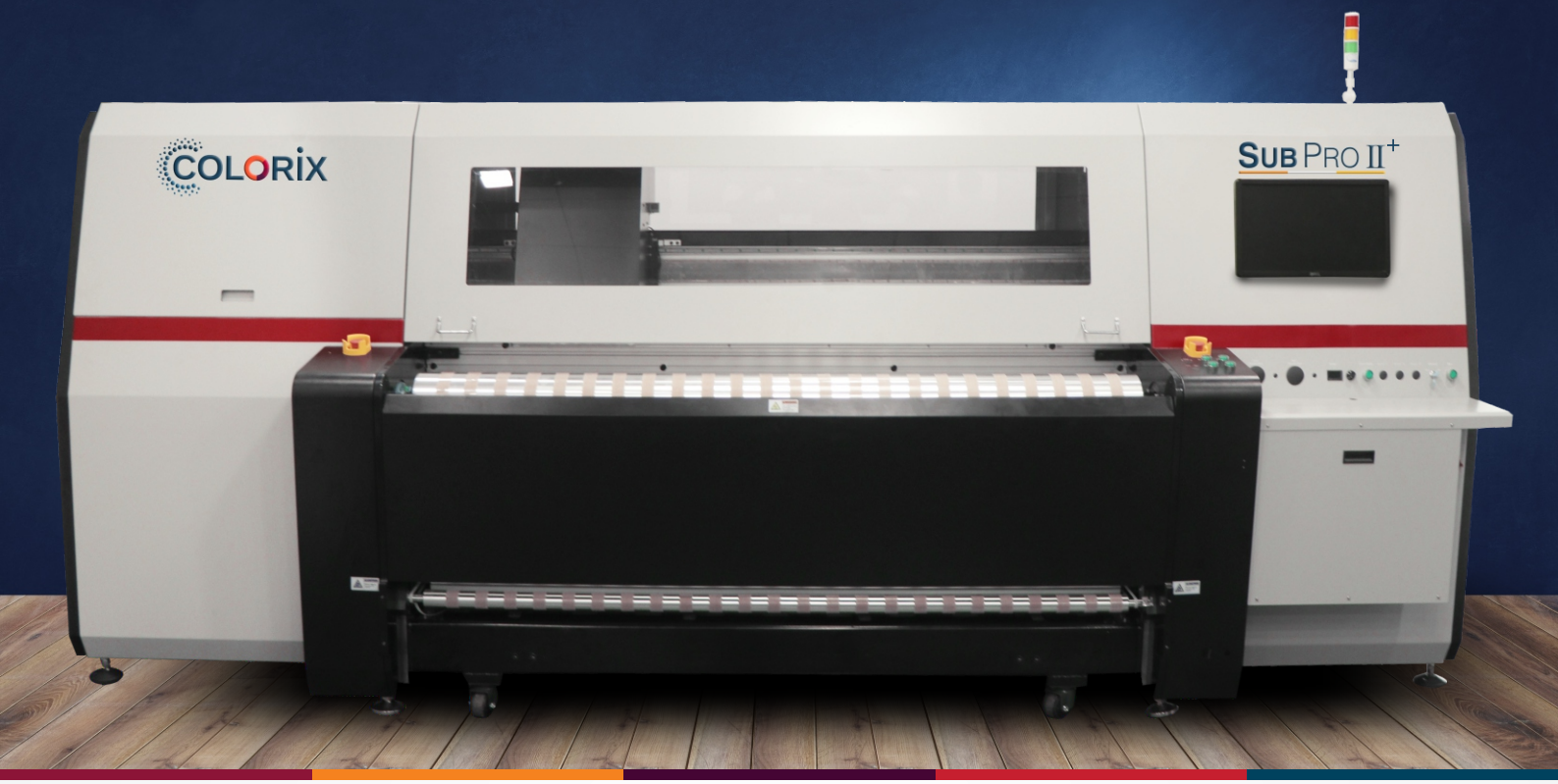

TECHNICAL SPECIFICATION

- **Print Head**
  Water-based print head
- **Print Head No.**
  8 pieces
- **Printing Mode**
  600*1800dpi
- **Printing Speed**
  up to 500 sqm/hr
- **Max. Printing Width**
  1900 mm
- **Dimension(L*W*H)**
  Printer: 4200mmx1920mmx2150mm
  Package: 4400mmx1950mmx2240mm
- **Printing height**
  2-30mm
- **Ink Colors**
  4-8 Colors, C,M,Y,K Orange, Blue, Fluorescence yellow, Fluorescence pink, Lc, Lm, Turquoise(optional)
- **Ink Type**
  Water-based sublimation ink
- **Max. Roll Diameter**
  500mm (standard un winder & winder roll)
  1000mm (optional media entry unit)
- **Dryer Type**
  Hot air
- **Media type**
  Transfer paper, (paper weight: 40-100gr/sqm)
- **Power Supply**
  AC 380V three phase I 37.5A (23kw) I 50Hz/60Hz
- **Power Consumption**
  System : 3 KW Dryer : 11 KW
- **Compresses air**
  0.6 Mpa I 0.15m /hr (dry, no oil or water)
- **Working environment**
  Temerature: 20~28 c (68~77 F)
  Relative humidity: 45-60%(no condensing)

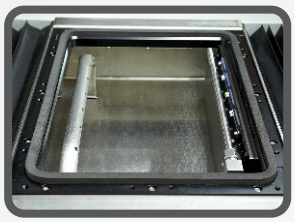

Intelligent constant-moisturizing capping system and creative auto-wiping printhead self-cleaning system

Built-in humidifier enables mist spray automatically, so constant moisturizing of nozzles guarantees the stability of ink supply system and prevents blocked nozzles caused by dry ink.
Automated head wiping removes the residual ink on the nozzle surface, to guarantee continuous printing.

Tension-adujstable continuous winding/unwinding control technology

Equipped with full servo motors for feeding and taking-up the stepping accuracy of the machine is greatly enhanced. The laser sensor at the winding section measures the roll diameter in real time for constant and smooth winding.

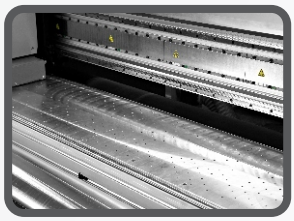

Adjustable vacuum system

The vacuum power can be adjusted by software for different printing medial, so the media flatness is optimized to improve the accuracy of ink drop point.

Industrial ink supply system: Peristaltic-pump ink supply + Efficient ink degassing

Peristaltic pumps keep the kinetic energy of ink supply at a constant level.
The efficient degassing modules clear the bubbles in ink tubes to avoid ink starvation.
These three designs work together to make ink spurted out smoothly to provide higher printing stability for industrial continuous production.

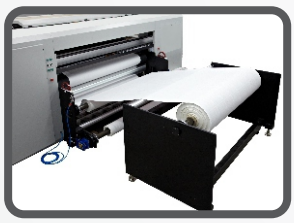

Separate medial entry unit (Optional)

Support 10,000 meters jumbo roll unwinder up to Φ 1000mm.

INSTALLATION LAYOUT

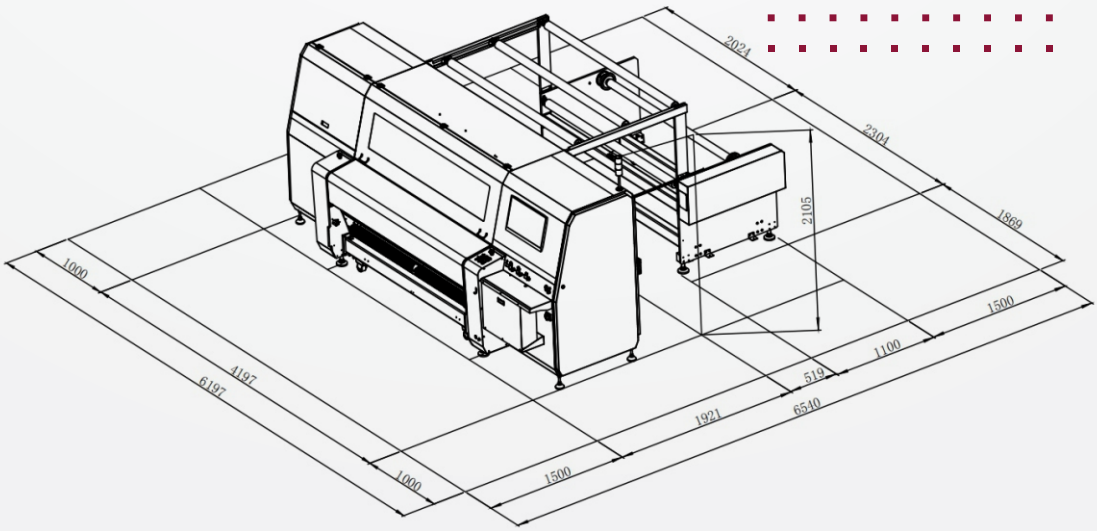

Shed No. A2/7111, Road No.71, Gate No. 01, Sachin, GIDC, Surat, Gujarat 394230 - INDIA
+91 7226861612/3/4/5 info@colorix.in www.colorix.in